Rotating Roll Arms T106AH90

slip-on version - hydraulically tiltable up to 90°

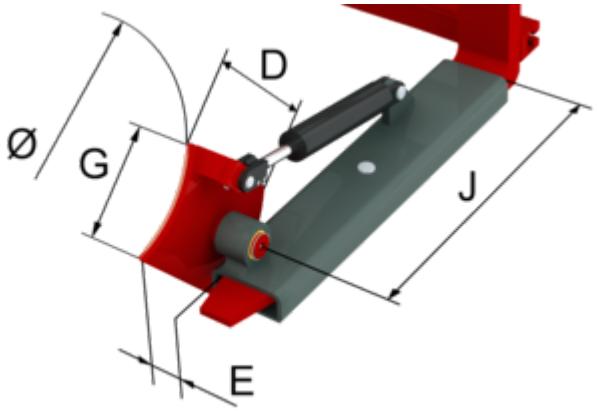

Specification:

KAUP Rotating Roll Arms T106AH 90° are used when cylindrical loads are only occasionally picked up and tilted or turned.

Attachment is hydraulically tiltable by 90°

Attachment is operated hydraulically, i.e. supplied with oil from the forklift truck's hydraulic system. Truck requires one additional hydraulic function.

Attachment is available for operation in explosion hazardous areas.

Rotating Roll Arms T106AH90

Technical specifications

Model							
2T106AH90	1	560-630	400	250	120	700	102
2T106A-2H90	2	560-630	400	250	120	700	132
4T106A-2H90	2	560-630	400	250	120	700	140

Rotating Roll Arms T106AH90

Qualities:

- Simple assembly
- Solid construction
- Other drum diameters available
- Hydraulically turnable by 90° Adaption for drum handling possible

- 1) Arm-overhang per side.
- 2) Minimum distance to fork shank
- Rotating roll arms for other diameters available upon request.
- special designs available for transportation of plastic drums (upon request)
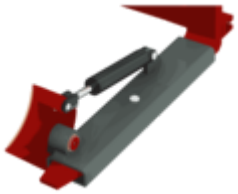
Product Images